6′8″ DRG3P 3/4 PREMIUM DOOR

OAK SERIES

AVAILABLE SIZING

ARTWORK SCALE: 1/2″=1′

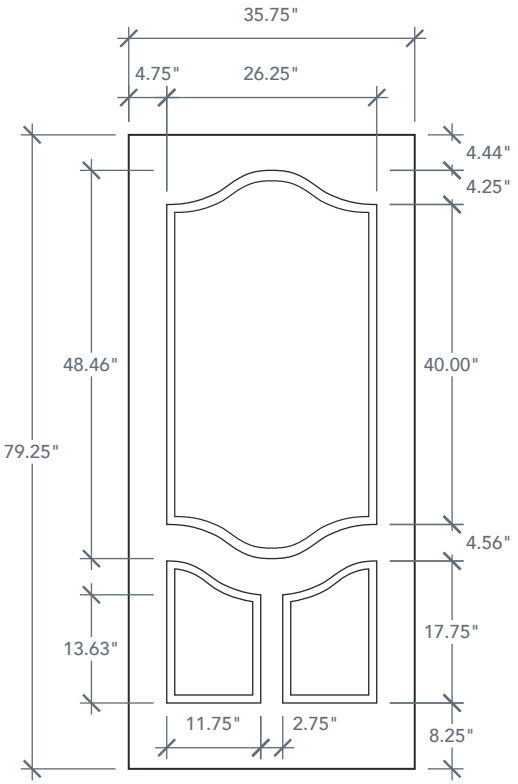

3′ 0″ x 6′ 8″

NOTE: BY REQUEST, DOOR HEIGHT COMES IN VARYING DIMENSIONS TO A MINIMUM OF 79″. EXCESS WILL BE TAKEN FROM BOTTOM RAIL. ALL OTHER DIMENSIONS WILL REMAIN THE SAME.

CUTOUTS & GLASS

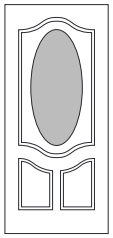

3/4 OVAL LITE		
3V2		
3′0″	Cutout	17.84″ x 40.12″
	Glass	16.78″ x 38.72″

OVAL IS CENTERED IN PANEL HEIGHT

MATCHING SIDELITES

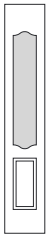

SLG3P

Available Widths:
1′ 0″
1′ 2″

Updated: March 2026